Figure 1. Clear Sight Triangle.

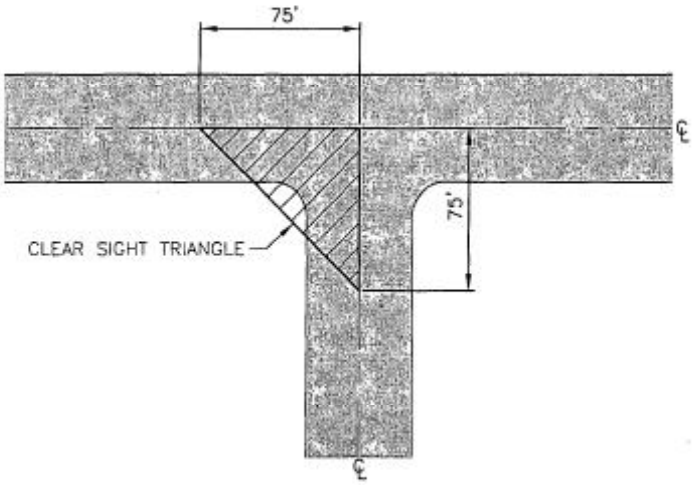

CLEAR SIGHT TRIANGLES OF SEVENTY-FIVE (75) FEET MEASURED ALONG STREET CENTER LINES FROM THEIR POINT OF JUNCTION SHALL BE PROVIDED AT ALL INTERSECTIONS AND NO STRUCTURES OR VEGETATION HIGHER THAN THREE (3) FEET SHALL BE PERMITTED WITHIN SUCH TRIANGLES. THE THREE FOOT MEASUREMENT SHALL BEGIN FROM THE ELEVATION OF THE ROAD, WHERE THE TOPOGRAPHY WITHIN THE TRIANGLE IS HIGHER THAN THE ROAD, THE FOLLOWING STANDARDS SHALL BE USED FOR MEASUREMENT:

TOPOGRAPHY ELEVATION	ALLOWABLE STRUCTURE/VEGETATION HEIGHT
1 FOOT HIGHER THAN THE ROAD	2 FEET
2 FEET HIGHER THAN THE ROAD	1 FOOT
3 FEET OR MORE HIGHER THAN THE ROAD	NO VEGETATION OR STRUCTURE SHALL BE PERMITTED WITHIN THE SIGHT TRIANGLE